TEHNICAL SHEET

NAME — **HD 3SD**

Features

High speed and long-lasting ECO friendly product

Dry hands completely in 10 - 12 seconds and 3times faster.

95% cost savings vs. paper towels

Energy saver which uses 80% less energy

One piece weld-free cover fixed by vandal-proof lock screw

The most HYGIENIC drying solution and best hand dryer

Technical Data Sheet

Motor Type	Carbon Brush Contacts Motor 38000RPM, 600W [0.80HP]
Voltage(-1)	110V - 120V 60Hz,8.3A, 1000Watt
Voltage(-2)	220V - 240V 50/60Hz, 4.3A, 1000Watt
Air TEMP	40°C[1040F](Room TEMP=25°C[770F])
Air Velocity	100M/S[328FT/S] /360KM/H[224MPH]
Air Flow	130M3/H[76.5CFM]
Protection	IP23 [Ingress Protection]
Isolation	CLASS I
Drying Time	10-12 Seconds
Sensor Range	5-15CM
Finished	Brushed or OEM
Material	Stainless Steel
Noise[at 1M]	74dB [Max]
Drying Nozzle	Blue LED Light
Air Inlet Filter	Coarse Filter
Heat Element	Hot/Cold Switch

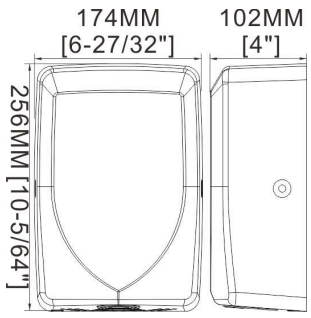

Shipping Info

Unit Shipping Weight	2.7KG[6.0lb]
Unit Net Weight	2.5KG[5.5lb]
20GP Container QTY	2700PCS
40HQ Container QTY	6350PCS
Standard Export Carton	4PCS/CTN
Carton Size	590x235x315MM